GENERAL NOTES:

1. GENERAL CONTRACTOR AND SUBCONTRACTORS SHALL VERIFY ALL DIMENSIONS AND CONDITIONS SHOWN ON THE PLANS, PRIOR TO COMMENCING WORK.
2. COORDINATE STRUCTURAL DETAILS & DIMENSIONS WITH RELATED REQUIREMENTS ON OTHER DRAWINGS.
3. THE ARCHITECT WILL INTERPRET THE INTENT OF THE DOCUMENTS IN CASE OF A POSSIBLE CONFLICT OR DISCREPANCY BETWEEN STRUCTURAL AND OTHER DISCIPLINES.
4. DETAILS NOTED AS "TYPICAL" OR "TYP" SHALL APPLY IN ALL CASES WHETHER OR NOT SPECIFICALLY REFERENCED.
5. WORKMANSHIP AND MATERIALS SHALL CONFORM TO THE REQUIREMENTS OF THE 2019 EDITION OF THE CALIFORNIA BUILDING CODE.
6. FOUNDATION DESIGN IS BASED UPON GEOTECHNICAL REPORT BY EARTH SYSTEMS PACIFIC, PROJECT NO. 301911-001, DATED AUGUST 20, 2018.
7. MATERIAL REQUIREMENTS:
   - A. CONCRETE: F'C = 2500 PSI AT 28 DAYS NO SPECIAL INSPECTION REQUIRED
   - B. CONCRETE BLOCK: ASTM C90 GRADE N-1 (NORMAL WEIGHT) NO SPECIAL INSPECTION REQUIRED (f'm= 1500psi) GROUT: f'c= 2,000 psi, MORTAR: f'c=1800psi
   - C. REINFORCING STEEL: ASTM A615, #4 & SMALLER – GRADE 40, #5 & LARGER – GRADE 60
   - D. EPOXY ANCHORS: REFER TO 4/– **SPECIAL INSPECTION REQUIRED.**

FOUNDATION NOTES:

1. ALL CONCRETE SHALL HAVE 2500 PSI MINIMUM COMPRESSIVE STRENGTH AT 28 DAYS. NO SPECIAL INSPECTION REQUIRED.
2. SOIL COMPACTION REPORT SHALL BE PROVIDED TO THE BUILDING INSPECTOR AT THE JOB SITE PRIOR TO PLACEMENT OF CONCRETE FOR THE FOUNDATION.
3. SOIL ENGINEER SHALL INSPECT FOUNDATION EXCAVATIONS PRIOR TO PLACEMENT OF CONCRETE FOR THE FOUNDATION.
4. ALL REINFORCING STEEL SHALL COMPLY WITH MATERIAL REQUIREMENTS NOTED ABOVE. PLACING OF REINFORCING STEEL SHALL COMPLY WITH CHAPTER 19 OF THE CALIFORNIA BUILDING CODE.
5. PRIOR TO THE CONTRACTOR REQUESTING A BUILDING DEPARTMENT FOUNDATION INSPECTION, THE SOILS ENGINEER SHALL ADVISE THE BUILDING OFFICIAL IN WRITING THAT:
   - A. THE BUILDING PAD WAS PREPARED IN ACCORDANCE WITH THE SOILS REPORT.
   - B. THE UTILITY TRENCHES HAVE BEEN PROPERLY BACKFILLED AND COMPACTED.
   - C. THE FOUNDATION EXCAVATIONS, THE SOIL EXPANSIVE CHARACTERISTICS AND BEARING CAPACITY CONFORM TO THE SOILS REPORT.

MASONRY NOTES:

1. THE CONTRACTOR SHALL VERIFY ALL DIMENSIONS AND CONDITIONS ON THE JOB. THE CONTRACTOR SHALL BE RESPONSIBLE FOR ALL TEMPORARY SUPPORT OF ANY VERTICAL EARTH CUTS OVER 6'-0" IN HEIGHT.
2. ALL CELLS TO BE THOROUGHLY WET BEFORE POURING GROUT.
3. ALL CELLS BELOW BACKFILL AND ALL OTHER CELLS WHICH CONTAIN REINFORCEMENT TO BE FILLED W/ GROUT
4. REINFORCEMENT TO BE SPLICED 48 DIAMETERS (40 KSI STEEL), MINIMUM. REINFORCEMENT TO BE SPLICED 72 DIAMETERS (60 KSI STEEL), MINIMUM.
5. REINFORCEMENT SHALL BE ACCURATELY SPLICED AND SECURED SO THAT IT WILL NOT BE DISPLACED. ALL CONCRETE SHALL BE PROPERLY CONSOLIDATED DURING PLACEMENT. ALL REINFORCING STEEL & EMBEDED ITEMS SHALL BE SECURELY TIED IN PLACE PRIOR TO PLACEMENT OF CONCRETE.
6. GROUT SHALL BE WELL RODDED TO INSURE A GOOD CONTACT WITH REINFORCEMENT AN TO ELIMINATE ROCK POCKETS AND VOIDS. THE CONTRACTOR SHALL TAKE ADEQUATE PRECAUTIONS FOR MIXING, PLACING, FINISHING, CURING AND PROTECTING CONCRETE DURING UNFAVORABLE WEATHER CONDITIONS.
7. POUR LIFTS SHALL BE 6'-0" MAXIMUM WITHOUT SPECIAL INSPECTION.
8. POUR ALL FOOTINGS AGAINST SOLID NATURAL UNDISTURBED EARTH OR COMPACTED FILL COMPACTED TO 90% RELATIVE DENSITY.
9. USE 4" PERFORATED P.V.C. DRAIN OR OMIT HEAD-JOINTS AT 32" O.C. FOR DRAINAGE. P.V.C. PIPE MUST DRAIN DOWN SLOPE AND BE NO LONGER THAN 40 FEET WITHOUT SPECIAL DESIGN.
10. BACKFILL WITH 6" WIDTH OF SAND OR CLEAN COURSE GRAVEL AND COVER WITH A 12" THICK COMPECTED FILL BLANKET AT THE SURFACE. BACKFILL SHALL NOT BE PLACED UNTIL SEVEN (7) DAYS AFTER GROUTING.
11. ALL WALLS SHALL BE WATERPROOFED ON THE SOIL SIDE.
12. GROUT STRENGTH SHALL BE EQUAL TO OR GREATER THAN CONCRETE STRENGTH.

SPECIAL INSPECTIONS

1. SPECIAL INSPECTIONS AND SUBSEQUENT REPORTS SHALL BE REINFORCED IN CONFORMANCE WITH SECTION 1704 OF THE 2019 CBC AT THE OWNERS EXPENSE.
2. ALL SPECIAL INSPECTIONS SHALL BE MADE BY AN INDEPENDENT INSPECTION AGENCY SUBJECT TO APPROVAL BY THE BUILDING DEPARTMENT, AND SHALL BE PAID BY THE OWNER.
3. THE FOLLOWING WORK SHALL BE PERFORMED UNDER CONTINUOUS DEPUTY INSPECTION IN THE PRESENCE OF THE OWNER'S SPECIAL INSPECTOR.
   - A. PLACEMENT OF CONCRETE WITH f'c = 3,000 PSI & GREATER
   - B. INSTALLATION OF EPOXY GROUTED DOWELS
4. SPECIAL INSPECTION & PROFESSIONAL OBSERVATION REPORTS SHALL BE SUBMITTED TO THE OWNER, ENGINEER, AND DEPARTMENT OF BUILDING & SAFETY NO LATER THAN SEVEN (7) WORKING DAYS FROM THE DATE OF INSPECTION/OBSERVATION.

STRUCTURAL OBSERVATION PROGRAM

THE OWNER SHALL EMPLOY THE ENGINEER REGISTERED/LICENSED IN THE STATE OF CALIFORNIA WHO IS RESPONSIBLE FOR THE STRUCTURAL DESIGN TO DO THE STRUCTURAL OBSERVATION.

PROJECT ENGINEERS: JAMES VINCI, S.E. S-4411

THE ENGINEER RESPONSIBLE FOR THE STRUCTURAL OBSERVATION, THE CONTRACTOR, AND APPROPRIATE SUBCONTRACTORS SHALL HOLD A PRE-CONSTRUCTION MEETING TO REVIEW THE DETAILS OF THE STRUCTURAL SYSTEM TO BE STRUCTURALLY OBSERVED.

THE FOLLOWING ITEMS SHALL BE OBSERVED AT EACH PHASE OF CONSTRUCTION:

FOUNDATION: STEEL PLACEMENT & FOOTING DIMENSIONS

WALL REINFORCING: STEEL PLACEMENT & WALL THICKNESS

GENERAL NOTES

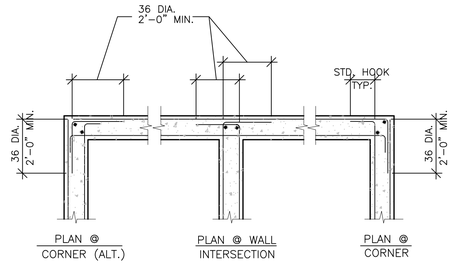

NOTES: 1. WHERE SINGLE LAYER OF REINF. OCCURS BEND REINF. AS SHOWN FOR OUTSIDE BARS.
2. USE 48 DIA. AT MASONRY WALLS IN LIEU OF 36 DIA.

REINFORCING AT CORNERS & INTERSECTIONS 3

PROCEDURE

1. DRILL HOLE OF PROPER DIAMETER AND DEPTH USING A CARBIDE TIPPED DRILL OR CORING BIT. AVOID ANY EXISTING REINFORCING STEEL BY RELOCATING HOLE SLIGHTLY.
2. CLEAN HOLE THOROUGHLY BY AIR PRESSURE.
3. MAKE SURE THAT HOLE IS DRY AND CLEAN BEFORE GROUTING.
4. PLACE EPOXY GROUT IN HOLE w/ CAULKING GUN OR SIMILAR EQUIPMENT STARTING AT BOTTOM, FILL HOLE APPROX. ⅔ FULL..
5. COAT DOWEL WITH SAME EPOXY GROUT AND INSERT INTO HOLE, FORCING MATERIAL AROUND THE SIDES OF THE BAR AND COMPLETELY FILLING ALL VOIDS.
6. PROVIDE SUPPORT FOR DOWEL BY TYING TO REBAR OR OTHER ELEMENT UNTIL GROUT HAS CURED.
7. EPOXY GROUT IN CMU SHALL BE SIMPSON SET EPOXY TIE (ESR 1772, LARR 25279), HILTI HIT-HY 150 MAX (ESR 1967, LARR 25881), AC100+ GOLD BY DEWALT (ESR 3200, LARR 26049)
8. EPOXY GROUT IN CONCRETE SHALL BE HIT-RE 500-SD BY HILTI CORP. (ESR 2322, LARR 25700), SIMPSON SET-XP (ESR-2508, LARR 03151) OR PURE110+ BY DEWALT (ICC ESR 3298, LARR 26035)
9. **SPECIAL INSPECTION REQUIRED**
10. SPECIAL INSPECTION IS REQUIRED FOR THE INSTALLATION OF EPOXY ADHESIVE ANCHORS. A REPORT SHALL BE GIVEN TO THE BUILDING INSPECTOR AT FRAMING INSPECTION.

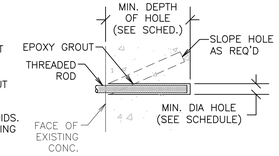

BAR SIZE	ROD SIZE	BIT DIAM.	MIN. DEPTH
#3	–	1/2"	4"
#4	1/2"	5/8"	5"
#5	5/8"	3/4"	6"
#6	3/4"	7/8"	7"
–	7/8"	1"	8"
–	1"	1-1/8"	9"

TYPICAL EPOXY GROUTED DOWELS / ANCHORS 4

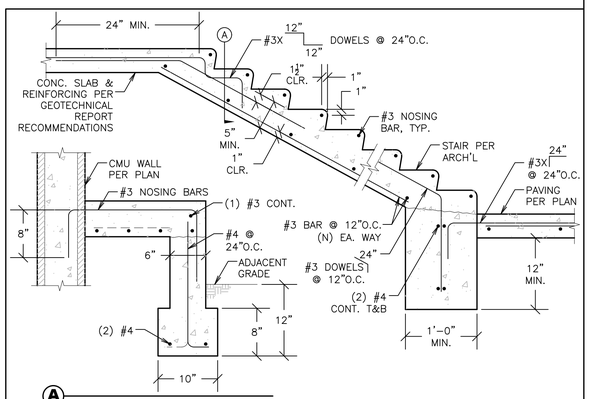

TYPICAL STAIR ON GRADE DETAIL 10

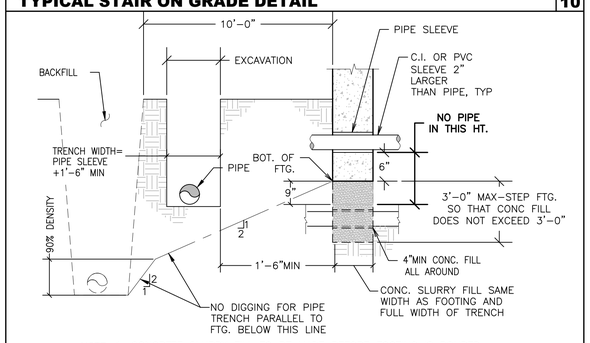

NOTE: 1. CONCRETE SLURRY FILL TO BE MADE BEFORE FOOTING IS POURED
2. PIPES MORE THAN 3'-0" BELOW BOTTOM OF FOOTING TRENCH MAY BE BACKFILLED WITH CONTROLLED, COMPACTED FILL.

PIPE IN OR ADJACENT TO FOOTING 14

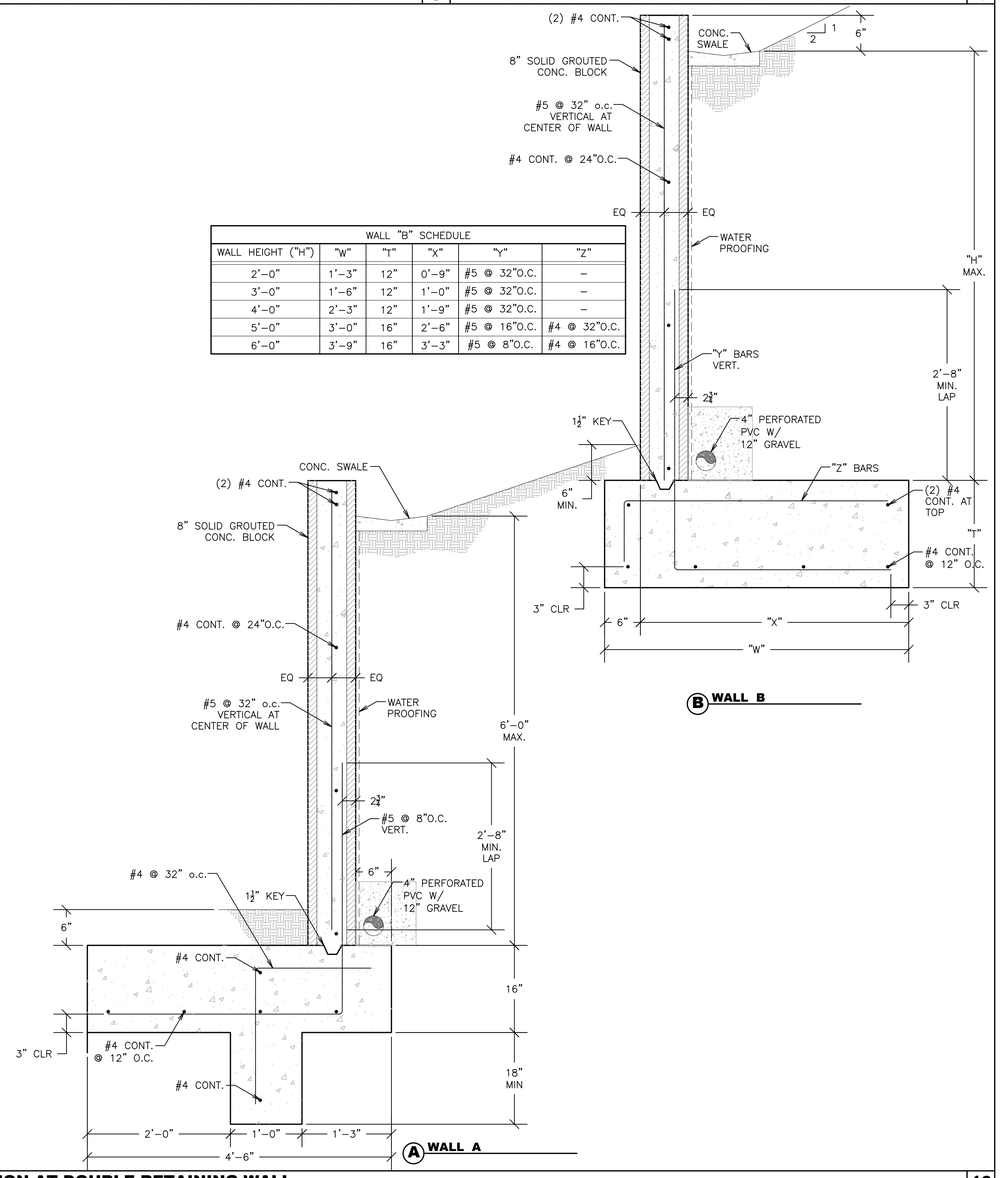

WALL "B" SCHEDULE					
WALL HEIGHT ("H")	"W"	"T"	"X"	"Y"	"Z"
2'-0"	1'-3"	12"	0'-9"	#5 @ 32"O.C.	–
3'-0"	1'-6"	12"	1'-0"	#5 @ 32"O.C.	–
4'-0"	2'-3"	12"	1'-9"	#5 @ 32"O.C.	–
5'-0"	3'-0"	16"	2'-6"	#5 @ 16"O.C.	#4 @ 32"O.C.
6'-0"	3'-9"	16"	3'-3"	#5 @ 8"O.C.	#4 @ 16"O.C.

SECTION AT DOUBLE RETAINING WALL 16

VINCI & ASSOCIATES
Structural Engineers
175 E. WILBUR ROAD, SUITE 103
THOUSAND OAKS, CA 91360
805.496.2100
VinciSE.com

Stamp

Oct 27, 2020

OWNERSHIP OF DOCUMENTS:
THIS DOCUMENT AND THE IDEAS AND DESIGNS INCORPORATED HEREIN AS AN INSTRUMENT OF PROFESSIONAL SERVICE IS THE PROPERTY OF VINCI & ASSOCIATES, AND SHALL NOT BE USED OR REPRODUCED IN ANY FORM OR BY ANY MEANS, IN WHOLE OR IN PART, FOR ANY OTHER PROJECT WITHOUT THE WRITTEN AUTHORIZATION OF VINCI & ASSOCIATES. COPYRIGHT © VINCI & ASSOCIATES 2018

Project Name / Address

Retaining Walls For:
Conejo Valley Church of Christ
2525 E. Hillcrest Dr.
Thousand Oaks, Ca

Sheet Title

GENERAL NOTES & DETAILS

FOR CONSTRUCTION

Revision	Description	Date

- Project Number: 20-5859
- Project Engineer: AM
- Checked By: JRV
- Drawn By: JWB
- Scale: 1/4"=1'-0"
- Date: 06-04-2020

Sheet Number

RW1

Sheet __ Of __

F:\Autocad Dwgs\A-Jobs\20-5800's\20-5859 - Conejo Valley Church of Christ\Sheets\20-5859-Detail Sheets.dwg, RW1, 10/27/2020 10:00:38 AM, 1:1

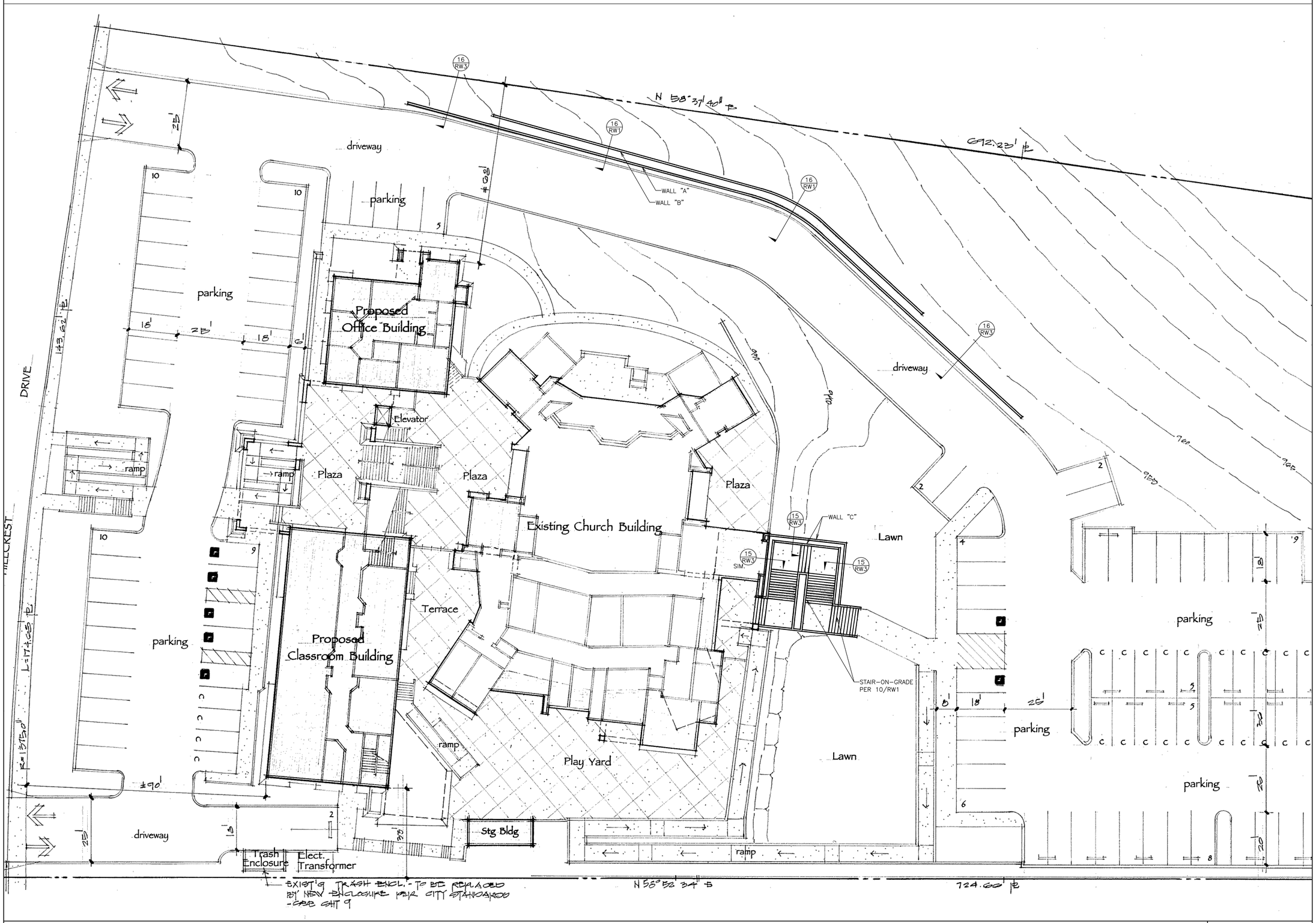

RETAINING WALL KEY PLAN | **SCALE: 1/16" = 1'-0"**

VINCI & ASSOCIATES
Structural Engineers
175 E. WILBUR ROAD, SUITE 103
THOUSAND OAKS, CA 91360
805.496.2100
VinciSE.com

Stamp

REGISTERED PROFESSIONAL ENGINEER
JOHN BENJAMIN VINCI
No. 3021
Exp. 12/31/21
STRUCTURAL
STATE OF CALIFORNIA

Oct 27, 2020

OWNERSHIP OF DOCUMENTS:
THIS DOCUMENT AND THE IDEAS AND DESIGNS INCORPORATED HEREIN AS AN INSTRUMENT OF PROFESSIONAL SERVICE IS THE PROPERTY OF VINCI & ASSOCIATES, AND SHALL NOT BE USED OR REPRODUCED IN ANY FORM OR BY ANY MEANS, IN WHOLE OR IN PART, FOR ANY OTHER PROJECT WITHOUT THE WRITTEN AUTHORIZATION OF VINCI & ASSOCIATES. COPYRIGHT © VINCI & ASSOCIATES 2018

Project Name / Address

Retaining Walls For:
Conejo Valley
Church of Christ
2525 E. Hillcrest Dr.
Thousand Oaks, Ca

Sheet Title

RETAINING WALL KEY PLAN

FOR CONSTRUCTION

Revision	Description	Date

Project Number:	20-5859
Project Engineer:	AM
Checked By:	JRV
Drawn By:	JWB
Scale:	1/4"=1'-0"
Date:	06-04-2020

Sheet Number

RW2

Sheet __ Of __

F:\Autocad Dwgs\A-Jobs\20-5800's\20-5859's\20-5859 Ing.dwg, RW2, 10/27/2020 10:00:45 AM, 1:1

.	1	.	2	.	3	.	4

WALL SCHEDULE						
WALL HEIGHT ("H")	"t"	"w"	"y"	"z"	"h"	"d"
6'-0"	8" CMU	4'-6"	N/A	#5 @ 8"O.C.	2'-8"	4"
8'-0"	12" CMU	5'-0"	#5 @ 16"O.C.	#5 @ 8"O.C.	2'-8"	15"
10'-0"	12" CMU	6'-6"	#5 @ 8"O.C.	#6 @ 8"O.C.	3'-4"	25"

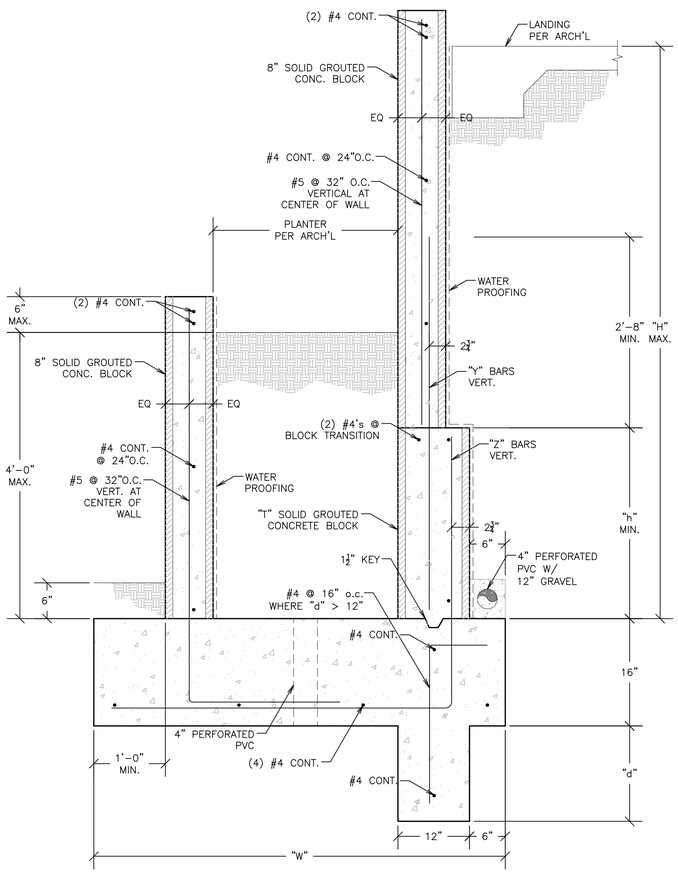

SECTION AT RETAINING WALL ADJACENT TO STAIR 15

WALL SCHEDULE				
WALL HEIGHT ("H")	"w"	"t"	"y"	"D"
3'-0"	1'-9"	12"	#5 @ 32"O.C.	–
4'-0"	2'-3"	12"	#5 @ 32"O.C.	–
5'-0"	3'-0"	16"	#5 @ 16"O.C.	–
6'-0"	3'-6"	16"	#5 @ 8"O.C.	4"

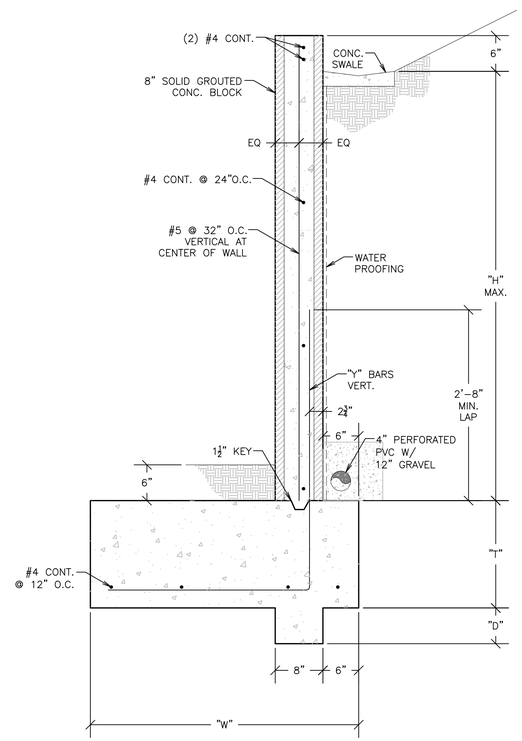

A 3'-0" TO 6'-0" MAX RETAINING WALL

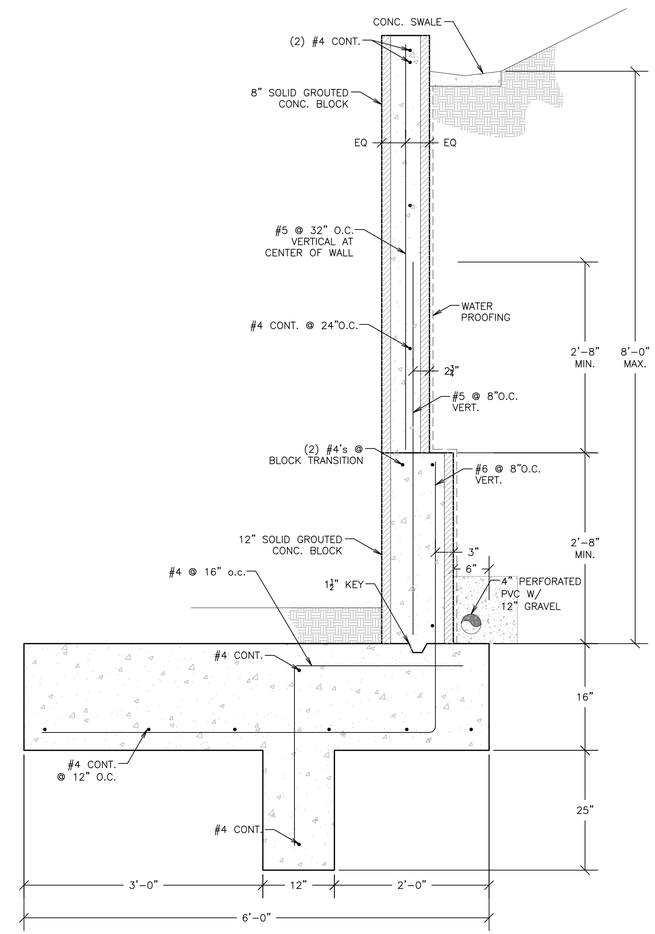

B 8'-0" MAXIMUM RETAINING WALL

SITE RETAINING WALL (WALL A WHERE NO WALL OCCURS ABOVE) 16

VINCI & ASSOCIATES
Structural Engineers
175 E. WILBUR ROAD, SUITE 103
THOUSAND OAKS, CA 91360
805.496.2100
VinciSE.com

Stamp

REGISTERED PROFESSIONAL ENGINEER
JAMES RICHARD VINCI
No. S4613
Exp. 12/31/21
STRUCTURAL
STATE OF CALIFORNIA

Oct 27, 2020

OWNERSHIP OF DOCUMENTS:
THIS DOCUMENT AND THE IDEAS AND DESIGNS INCORPORATED HEREIN AS AN INSTRUMENT OF PROFESSIONAL SERVICE IS THE PROPERTY OF VINCI & ASSOCIATES, AND SHALL NOT BE USED OR REPRODUCED IN ANY FORM OR BY ANY MEANS, IN WHOLE OR IN PART, FOR ANY OTHER PROJECT WITHOUT THE WRITTEN AUTHORIZATION OF VINCI & ASSOCIATES. COPYRIGHT © VINCI & ASSOCIATES 2018

Project Name / Address

Retaining Walls For:
Conejo Valley
Church of Christ
2525 E. Hillcrest Dr.
Thousand Oaks, Ca

Sheet Title

RETAINING WALL DETAILS

FOR CONSTRUCTION

Revision	Description	Date

Project Number:	20-5859
Project Engineer:	AM
Checked By:	JRV
Drawn By:	JWB
Scale:	1/4"=1'-0"
Date:	06-04-2020

Sheet Number

RW3

Sheet __ Of __

F:\Autocad Dwgs\A-Jobs\20-5800's\20-5859 - Conejo Valley Church of Christ\Sheets\20-5859-Detail Sheets.dwg, RW3, 10/27/2020 10:00:58 AM, 1:1